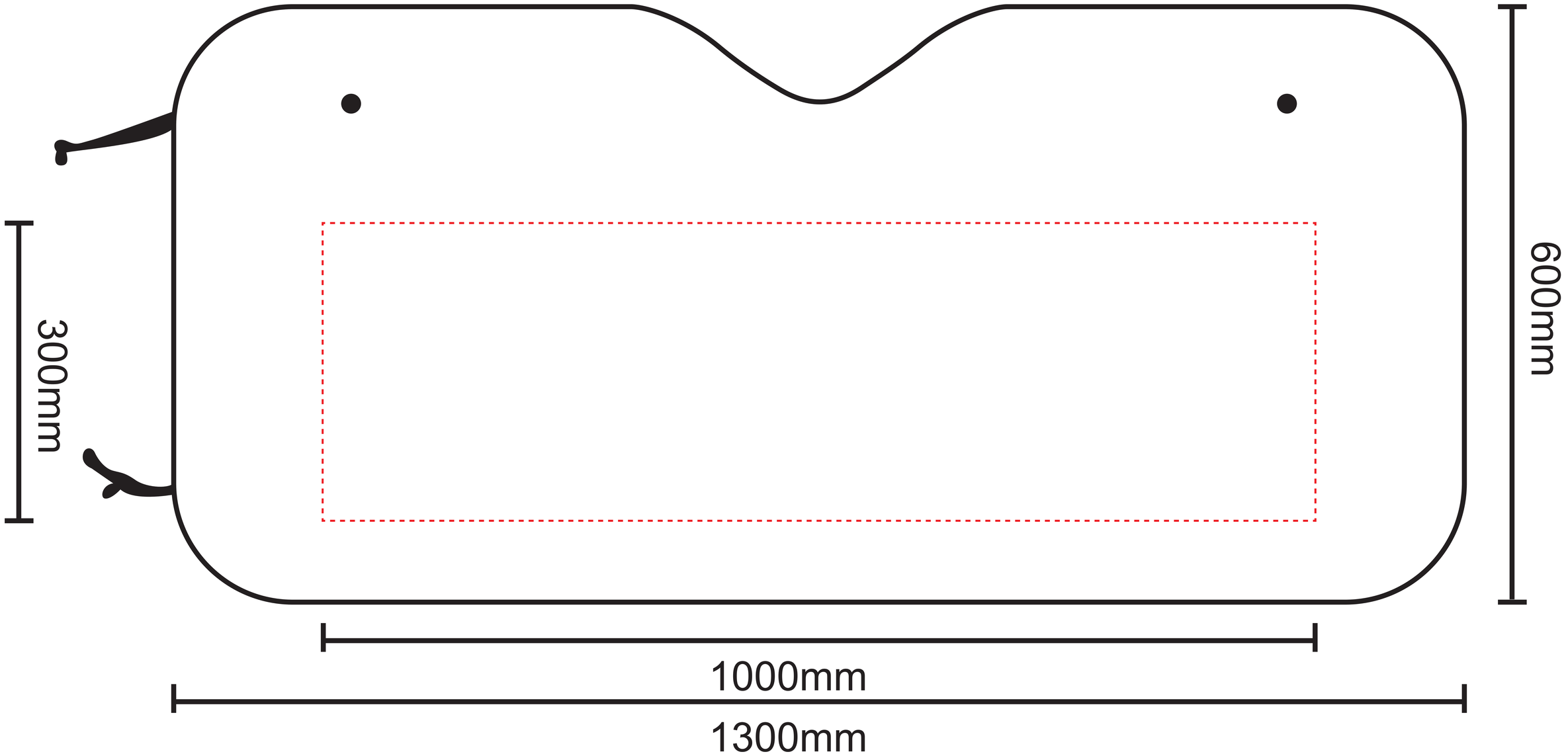
300mm
600mm
1000mm
1300mm